REAR AXLE BEAM

COMPONENTS
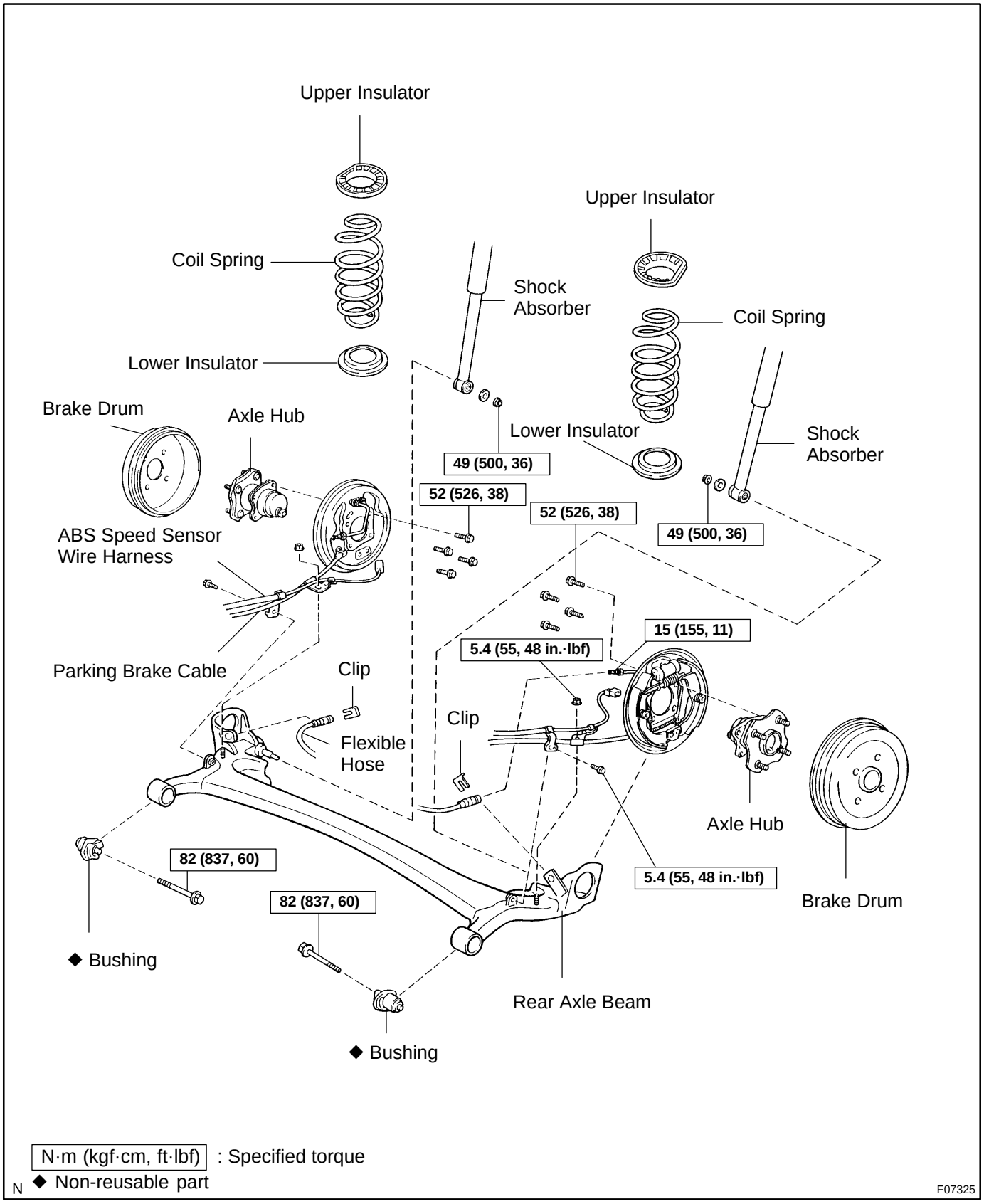
SA0QW-03